Diskretni krmilni sistemi

Primož Podržaj

Fakulteta za strojništvo, Univerze v Ljubljani

14. marec 2022

1. Prenosne karakteristike elementov krmilnega sistema
   - Definicija prenosne karakteristike
   - Prenosne karakteristike posameznih elementov
     - Proporcionalni elementi
     - Integracijski elementi
     - Diferencirni elementi
     - Element s časovnim zadržkom
   - Prenosne karakteristike sestavljenih sistemov
     - Osnovni mehanski gradniki
     - Osnovni električni gradniki
     - Zaporedna in vzporedna vezava
   - Analogije

Definicija prenosne karakteristike

- $\frac{a_n d^n y(t)}{dt^n} + \cdots + a_1 \frac{dy(t)}{dt} + a_0 y(t) = b_m \frac{d^m x(t)}{dt^m} + \cdots + b_1 \frac{dx(t)}{dt} + b_0 x(t)$
- $(a_n D^n + \cdots + a_1 D + a_0)\, y(t) = (b_m D^m + \cdots + b_1 D + b_0)\, x(t)$
- $y(t) = \frac{b_m D^m + \cdots + b_1 D + b_0}{a_n D^n + \cdots + a_1 D + a_0} x(t)$
- $P(D) = \frac{b_m D^m + \cdots + b_1 D + b_0}{a_n D^n + \cdots + a_1 D + a_0}$

Definicija prenosne karakteristike

- $\frac{a_n d^n y(t)}{dt^n} + \cdots + a_1 \frac{dy(t)}{dt} + a_0 y(t) = b_m \frac{d^m x(t)}{dt^m} + \cdots + b_1 \frac{dx(t)}{dt} + b_0 x(t)$
- $(a_n D^n + \cdots + a_1 D + a_0)\, y(t) = (b_m D^m + \cdots + b_1 D + b_0)\, x(t)$
- $y(t) = \frac{b_m D^m + \cdots + b_1 D + b_0}{a_n D^n + \cdots + a_1 D + a_0} x(t)$
- $P(D) = \frac{b_m D^m + \cdots + b_1 D + b_0}{a_n D^n + \cdots + a_1 D + a_0}$

Definicija prenosne karakteristike

- $\frac{a_n d^n y(t)}{dt^n} + \cdots + a_1 \frac{dy(t)}{dt} + a_0 y(t) = b_m \frac{d^m x(t)}{dt^m} + \cdots + b_1 \frac{dx(t)}{dt} + b_0 x(t)$
- $(a_n D^n + \cdots + a_1 D + a_0)\, y(t) = (b_m D^m + \cdots + b_1 D + b_0)\, x(t)$
- $y(t) = \frac{b_m D^m + \cdots + b_1 D + b_0}{a_n D^n + \cdots + a_1 D + a_0} x(t)$
- $P(D) = \frac{b_m D^m + \cdots + b_1 D + b_0}{a_n D^n + \cdots + a_1 D + a_0}$

Definicija prenosne karakteristike

- $\frac{a_n d^n y(t)}{dt^n} + \cdots + a_1 \frac{dy(t)}{dt} + a_0 y(t) = b_m \frac{d^m x(t)}{dt^m} + \cdots + b_1 \frac{dx(t)}{dt} + b_0 x(t)$
- $(a_n D^n + \cdots + a_1 D + a_0)\, y(t) = (b_m D^m + \cdots + b_1 D + b_0)\, x(t)$
- $y(t) = \frac{b_m D^m + \cdots + b_1 D + b_0}{a_n D^n + \cdots + a_1 D + a_0} x(t)$
- $P(D) = \frac{b_m D^m + \cdots + b_1 D + b_0}{a_n D^n + \cdots + a_1 D + a_0}$

Blok s prenosno karakteristiko

Prenosna karakteristika je operator, ki na vstopni signal $x(t)$ deluje tako, da dobimo izstopni signal $y(t)$.

Delitev el. glede na pren. karakt.

- **Proporcionalni elementi**
  So elementi, katerih stacionarna rešitev je proporcionalna enotski koračni funkciji.
- **Integracijski elementi**
  So elementi, katerih stacionarna rešitev je proporcionalna enotski strmini (rampi).
- **Diferencirni elementi**
  So elementi, katerih stacionarna rešitev je proporcionalna enotski impulzni (delta) funkciji.

Proporcionalni elementi ničtega reda (P_0)

Opisuje jih izraz: $y(t) = K_p\, x(t) \quad \Rightarrow \quad P(D) = K_p$

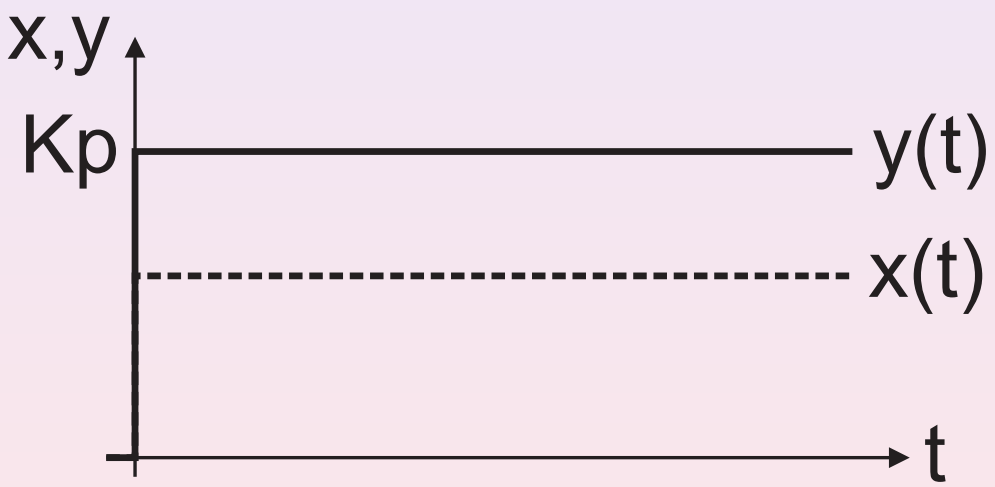

Mehanski prop. el. ničtega reda (drog)

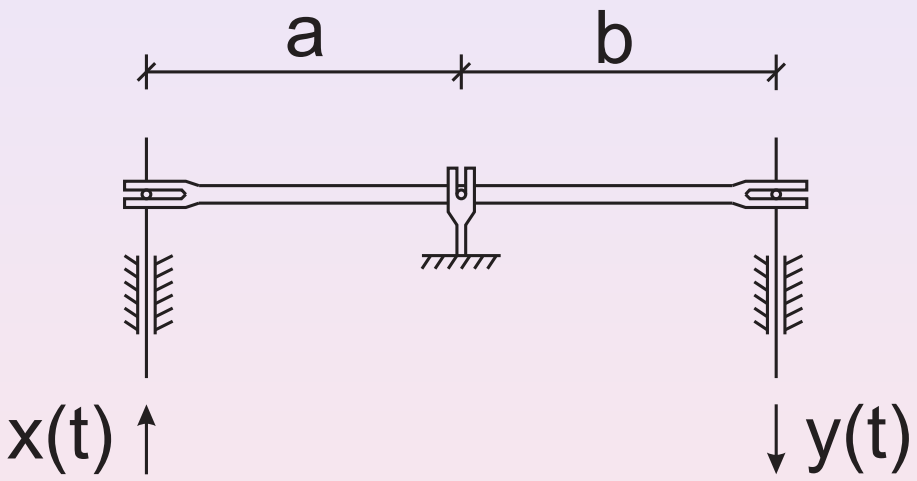

Opisuje ga izraz: $y(t) = \frac{b}{a}\,x(t) \quad \Rightarrow \quad K_p = \frac{b}{a}$

Električni prop. element ničtega reda

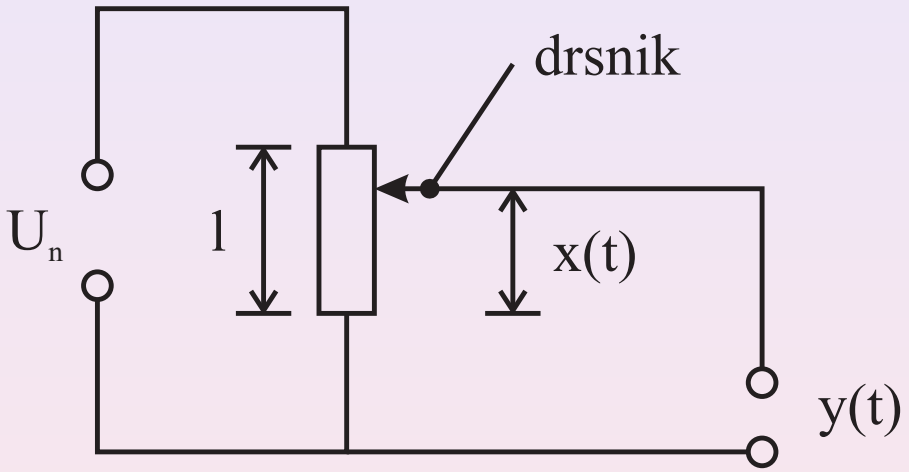

Opisuje ga izraz: $y(t) = \frac{x(t)}{l} U_n = \frac{U_n}{l} x(t) \quad \Rightarrow \quad K_p = \frac{U_n}{l}$

Proporcionalni elementi prvega reda (P_1)

Opisuje jih izraz: $\tau\dot{y} + y = K_p\, x(t) \quad \Rightarrow \quad P(D) = \frac{K_p}{1+\tau D}$

Rešitev: $y(t) = K_p \left(1 - e^{-\frac{t}{\tau}}\right)$

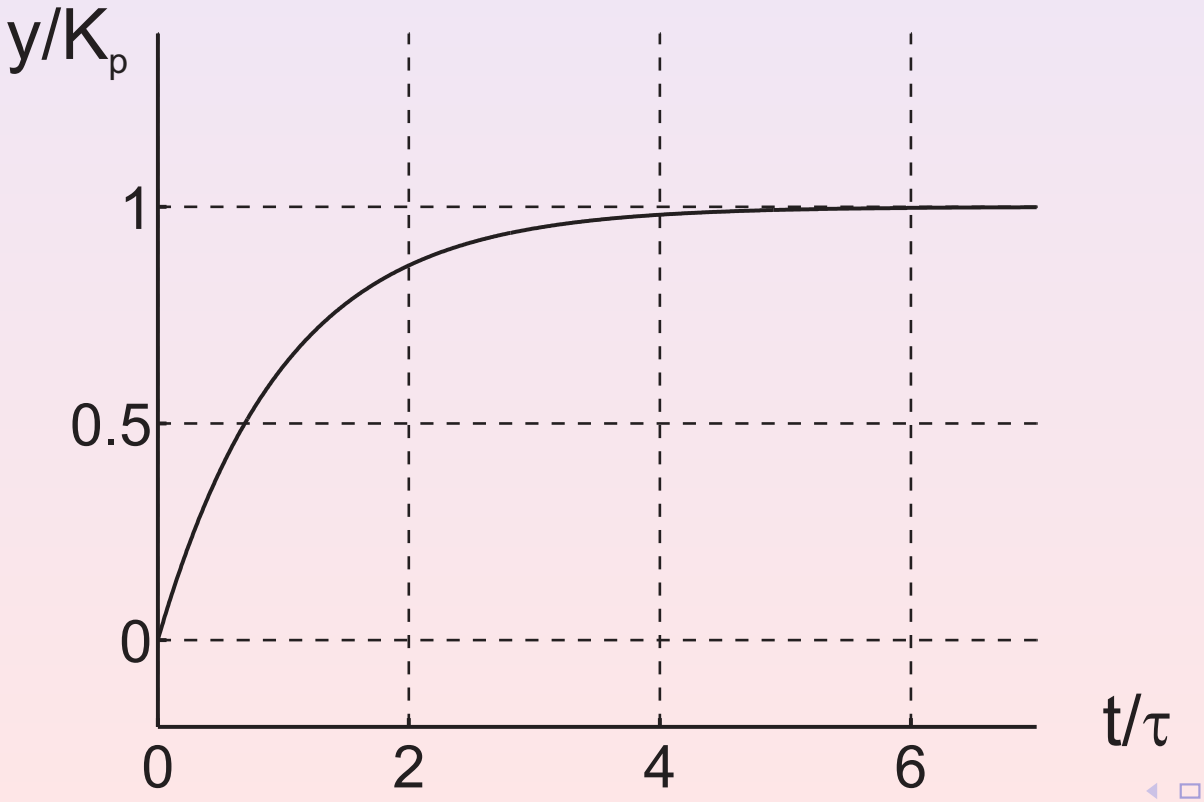

Mehanski prop. el. prvega reda

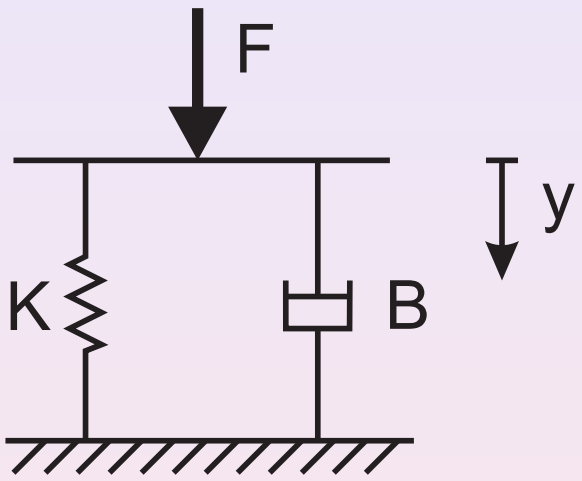

Opisuje ga izraz: $\frac{B}{K}\dot{y} + y = \frac{1}{K}F \quad \Rightarrow \quad P(D) = \frac{\frac{1}{K}}{1+\frac{B}{K}D} = \frac{1}{BD+K}$

Rešitev: $y(t) = \frac{1}{K}\left(1 - e^{-\frac{t}{\frac{B}{K}}}\right)$

Električni prop. element prvega reda

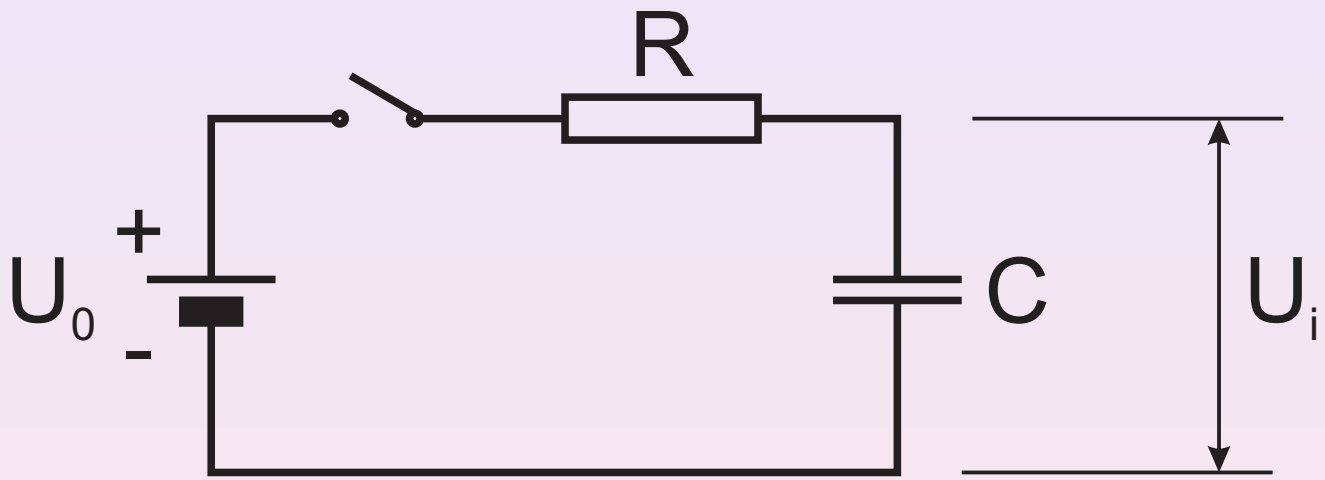

Opisuje ga izraz: $R\,C\,\frac{dU_i}{dt} + U_i = U_0 \quad \Rightarrow \quad P(D) = \frac{1}{RCD+1}$

Rešitev: $U_i(t) = U_0\left(1 - e^{-\frac{t}{RC}}\right)$

Pnevmatski prop. element prvega reda

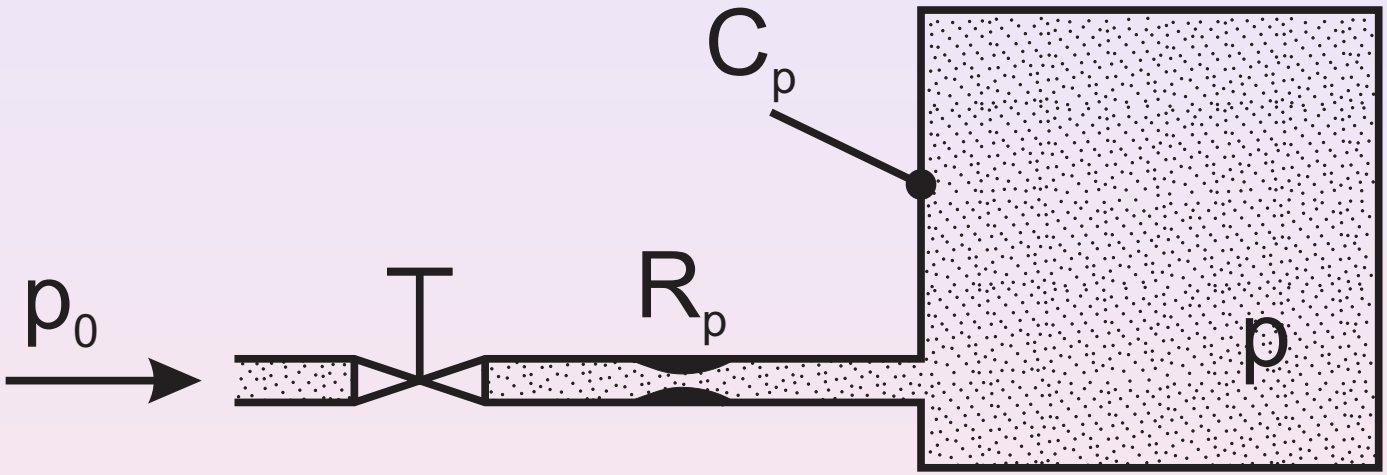

Velja $q = \frac{1}{R_p}(p_0 - p)$ in $\frac{dp}{dt} = \frac{1}{C_p} q = \frac{1}{R_p C_p}(p_0 - p)$

Opisuje ga dif. en.: $R_p C_p \frac{dp}{dt} + p = p_0 \quad \Rightarrow \quad P(D) = \frac{1}{R_p C_p D + 1}$

Toplotni prop. element prvega reda

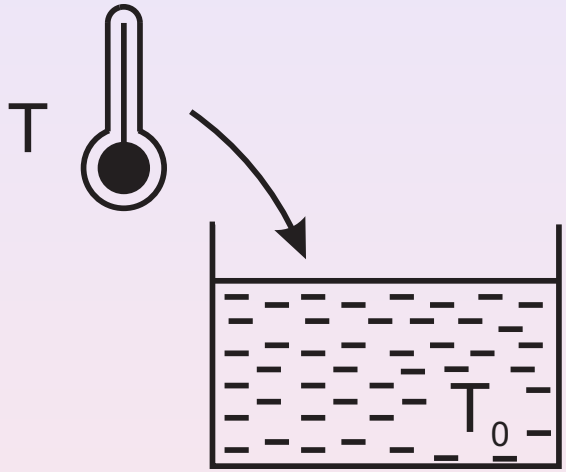

Velja $\frac{dT}{dt} = k(T_0 - T)$

Opisuje ga dif. en.: $\frac{1}{k}\frac{dT}{dt} + T = T_o \quad \Rightarrow \quad P(D) = \frac{1}{\frac{1}{k}D+1}$

Proporcionalni elementi drugega reda (P_2)

Izhodiščna dif. en.:

$$\frac{1}{\omega_n^2}\ddot{y} + \frac{2\zeta}{\omega_n}\dot{y} + y = K_p\, x(t) \quad \Rightarrow \quad P(D) = \frac{K_p}{\frac{D^2}{\omega_n^2} + \frac{2\zeta D}{\omega_n} + 1}$$

Rešitve odvisne od parametrov ζ in ω_n

Rešitev za $0 < \zeta < 1$ in $x(t)$ je enotska koračna funkcija:

$$y(t) = K_p \left[1 - \frac{e^{-\zeta\omega_n t}}{\sqrt{1-\zeta^2}} \sin\left(\omega_n\sqrt{1-\zeta^2}\,t + \phi\right)\right] \qquad \phi = \arccos\zeta$$

Grafični prikaz prehodnih funkcij za P_2 element

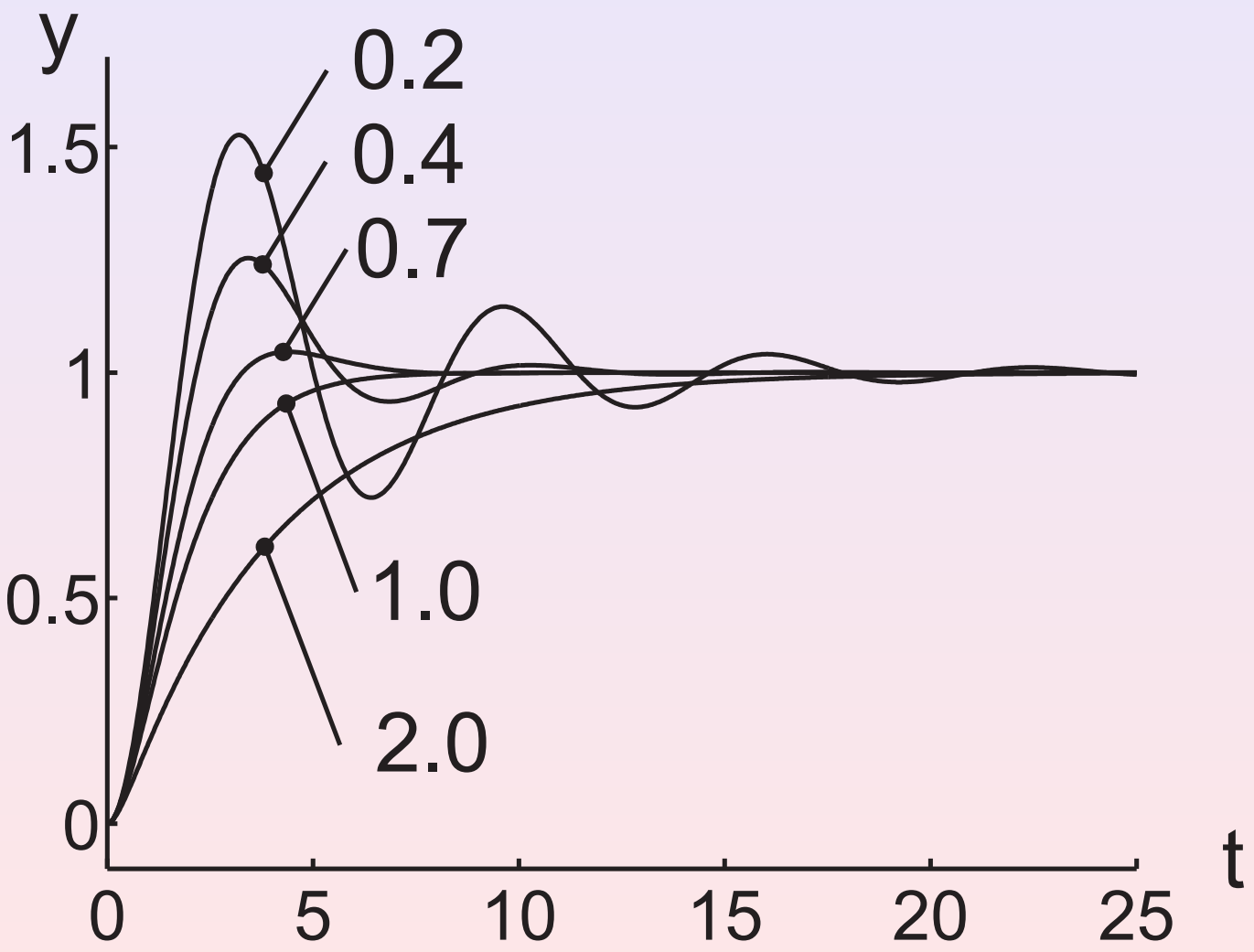

Mehanski prop. el. drugega reda

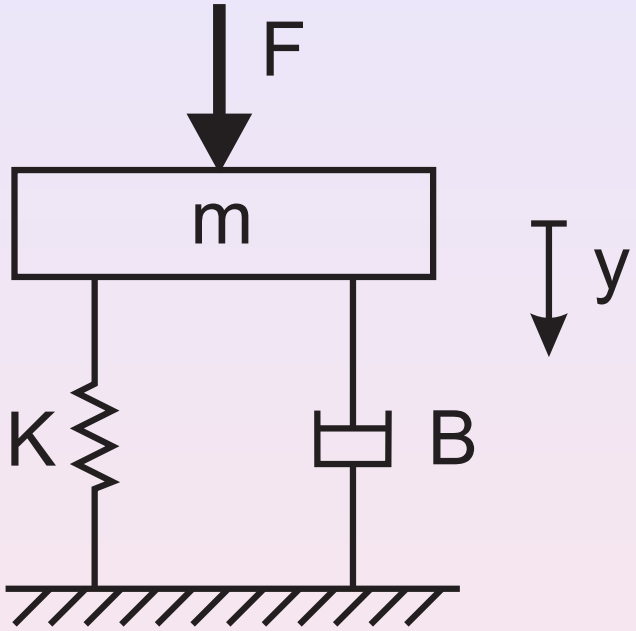

Opisuje ga izraz:

$$\frac{m}{K}\ddot{y} + \frac{B}{K}\dot{y} + y = \frac{1}{K}F \quad \Rightarrow \quad P(D) = \frac{\frac{1}{K}}{\frac{D^2}{\frac{K}{m}} + \frac{D}{\frac{K}{B}} + 1} = \frac{1}{mD^2 + BD + K}$$

Velja: $\omega_n = \sqrt{\frac{K}{m}}; \qquad \zeta = \frac{B}{2\sqrt{Km}}$

Električni prop. element drugega reda

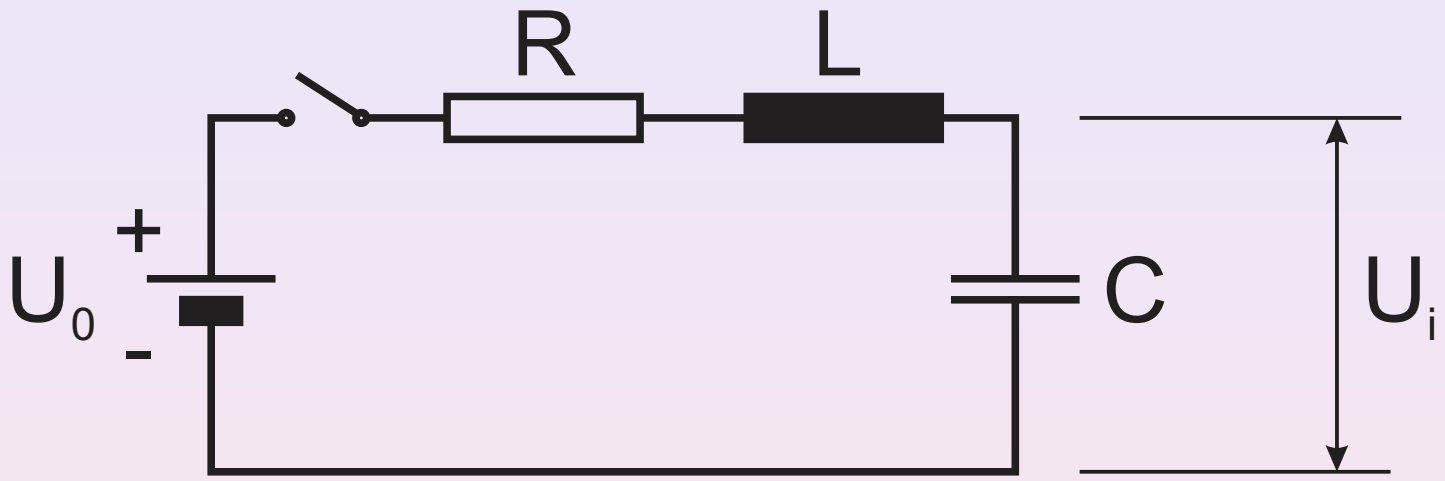

Izhodišče: $U_L = L\frac{di}{dt}$, $q = C\,U_i$ in $i = \frac{dq}{dt}$

Opisuje ga izraz:

$$LC\frac{d^2U_i}{dt^2} + RC\frac{dU_i}{dt} + U_i = U_0 \quad \Rightarrow \quad P(D) = \frac{1}{LCD^2+RCD+1}$$

Velja: $\omega_n = \sqrt{\frac{1}{LC}}$; $\qquad \zeta = \frac{1}{2}R\sqrt{\frac{C}{L}}$

Integracijski element ničtega reda (I_0)

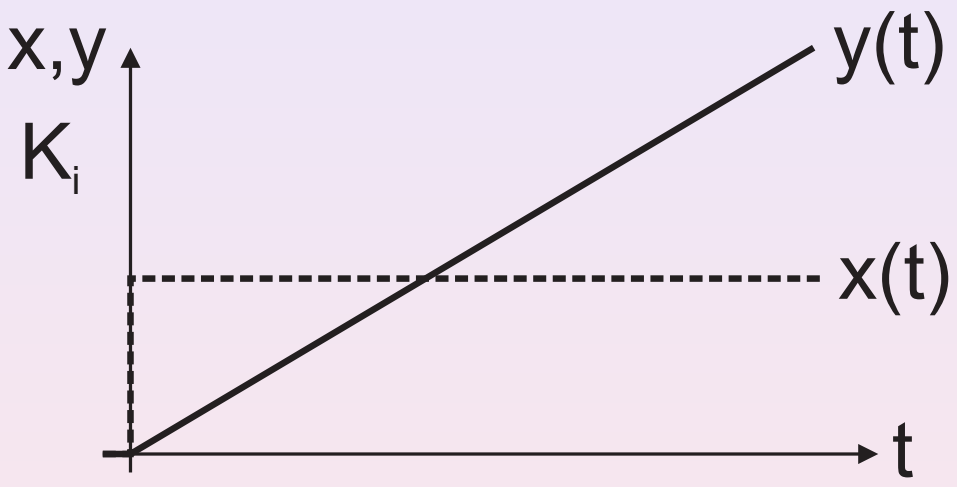

Opisuje ga izraz: $y(t) = K_i \int x(t)dt \quad \Rightarrow \quad P(D) = \frac{K_i}{D}$

Servomotor kot integracijski el. ničtega reda

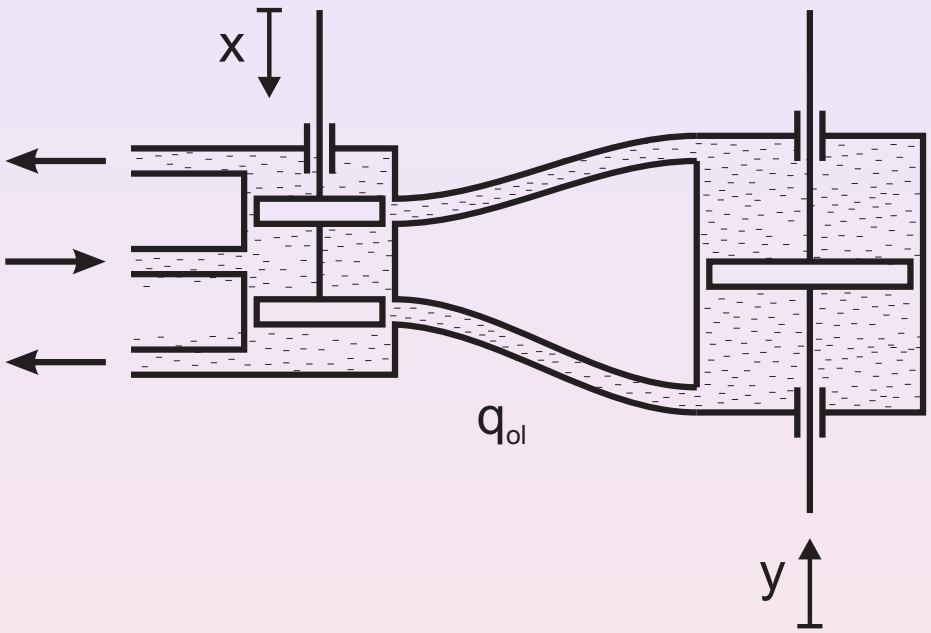

Velja: $q_{ol} = k\,x$ in $y = \frac{1}{A}\int q_{ol}dt = \frac{1}{AD}q_{ol}$

Opisuje ga izraz: $y = \frac{k}{AD}x \quad \Rightarrow \quad P(D) = \frac{k}{AD}$

Posoda kot integracijski el. ničtega reda

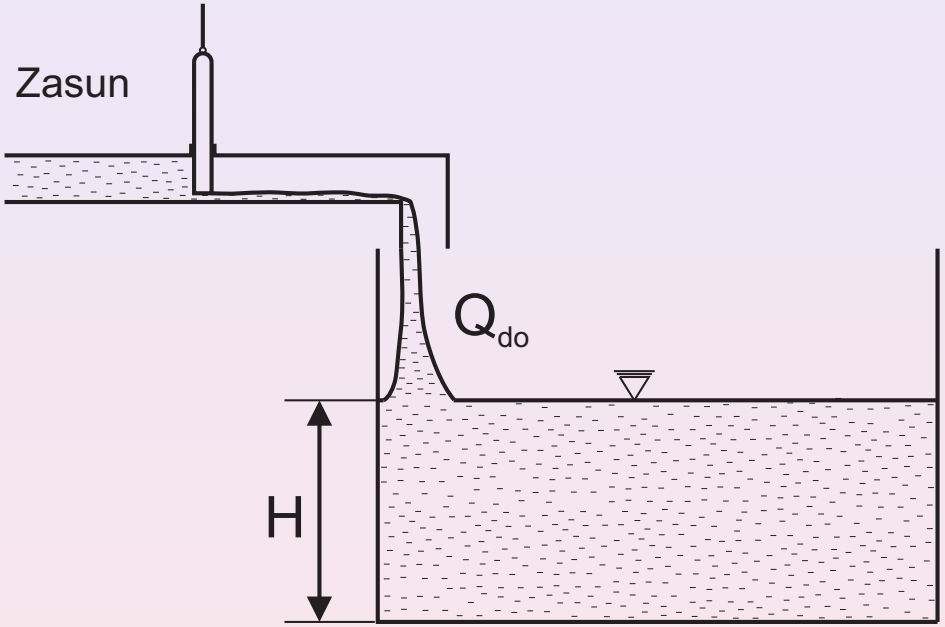

Opisuje ga izraz: $h = \frac{1}{A}\int q_{do}dt = \frac{1}{AD}q_{do} \quad \Rightarrow \quad P(D) = \frac{1}{AD}$

Elektromotor kot integracijski el. ničtega reda

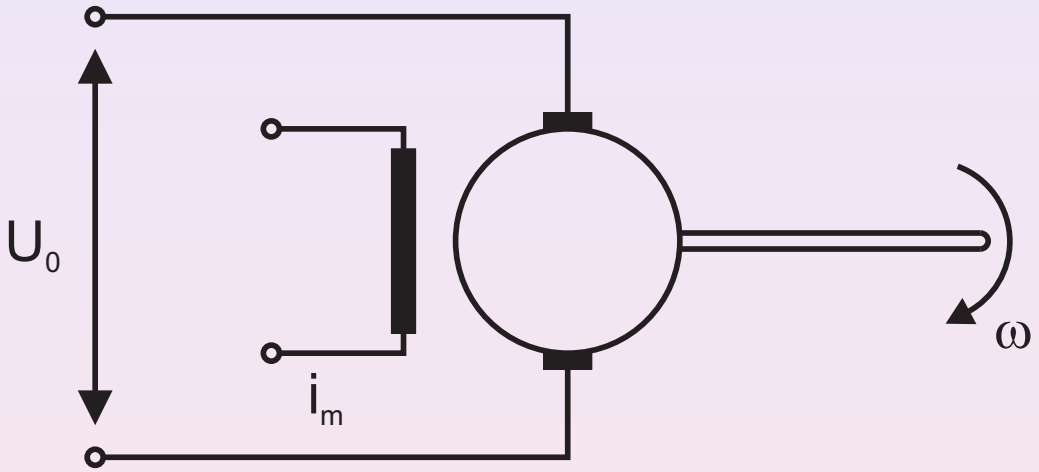

Velja: $\omega = k\, U_0$

Opisuje ga izraz: $\varphi = \int \omega dt = \int k\, U_0\, dt = \frac{k}{D}\, U_0 \quad \Rightarrow \quad P(D) = \frac{k}{D}$

Integracijski element prvega reda (I_1)

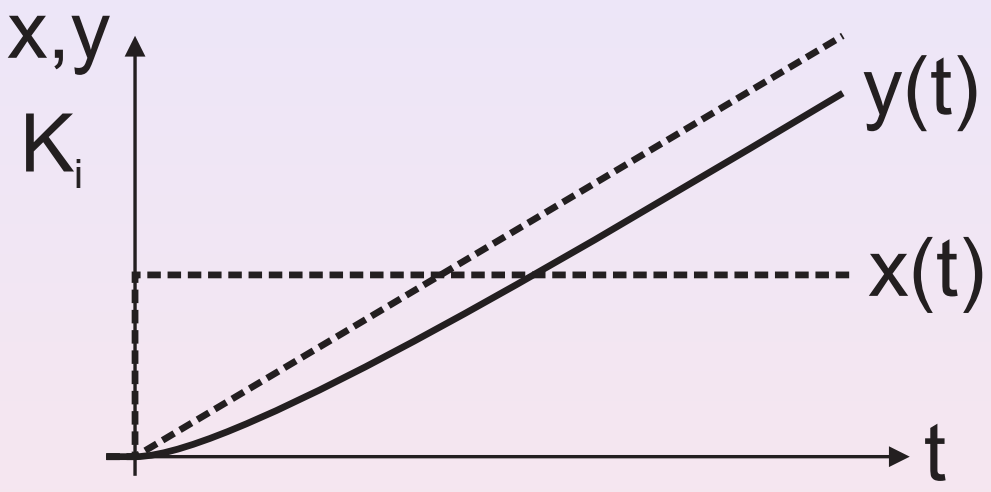

Izhodišče: $\tau \frac{dy}{dt} + y = K_i \int x(t)dt$

Opisuje ga izraz: $\tau \frac{d^2y}{dt^2} + \frac{dy}{dt} = K_i x(t) \quad \Rightarrow \quad P(D) = \frac{K_i}{D\,(1+\tau D)}$

Meh. sist. kot integracijski el. prvega reda

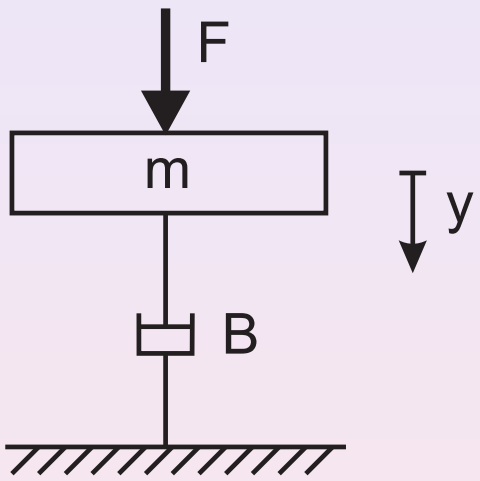

Velja: $m\ddot{y} + B\dot{y} = F$

Opisuje ga izraz: $\frac{m}{B}\ddot{y} + \dot{y} = \frac{1}{B}F \quad \Rightarrow \quad P(D) = \frac{\frac{1}{B}}{D\,(1+\frac{m}{B}D)}$

Diferencirni el. ničtega reda (D_0)

Opisuje ga izraz: $y = K_d \frac{dx(t)}{dt}$

Diferencirni el. prvega reda (D_1)

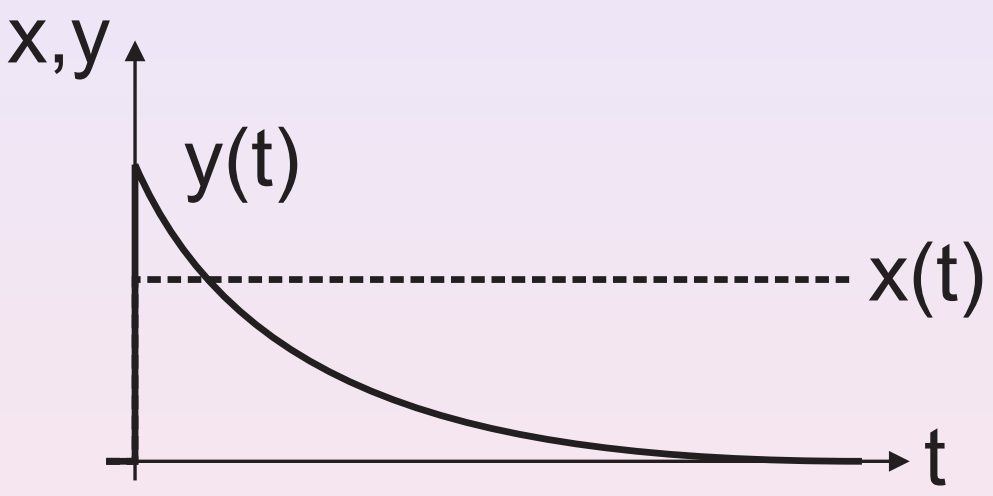

Opisuje ga izraz: $\tau \frac{dy}{dt} + y = K_d \frac{dx(t)}{dt} \quad \Rightarrow \quad P(D) = \frac{K_d D}{1+\tau D}$

Elektr. sist. kot dif. el. prvega reda

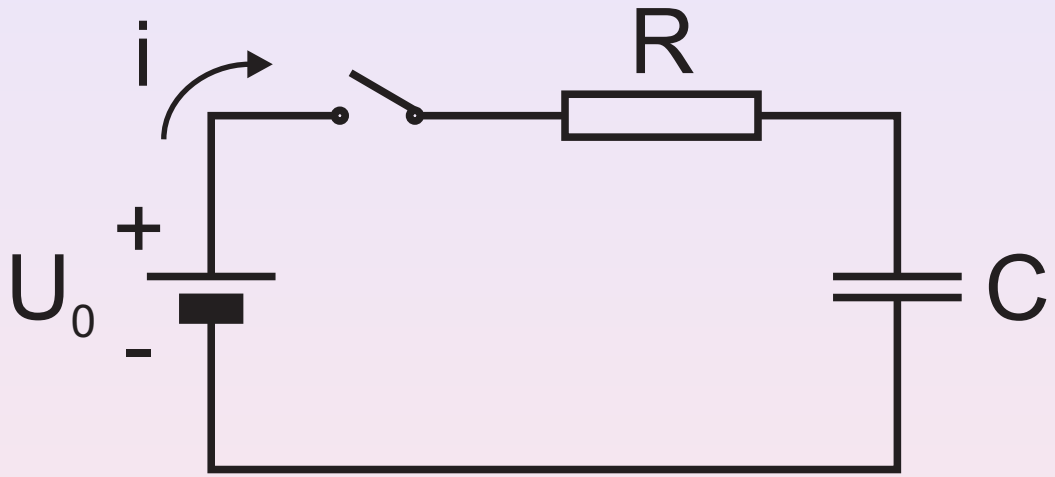

Velja: $U_R + U_C = U_0 \quad \Rightarrow \quad R\,i + \frac{1}{C}\int i dt = U_0$

Opisuje ga izraz: $RC\frac{di}{dt} + i = C\frac{d}{dt}U_0 \quad \Rightarrow \quad P(D) = \frac{CD}{1+RC\,D}$

Primer sistema s časovnim zadržkom

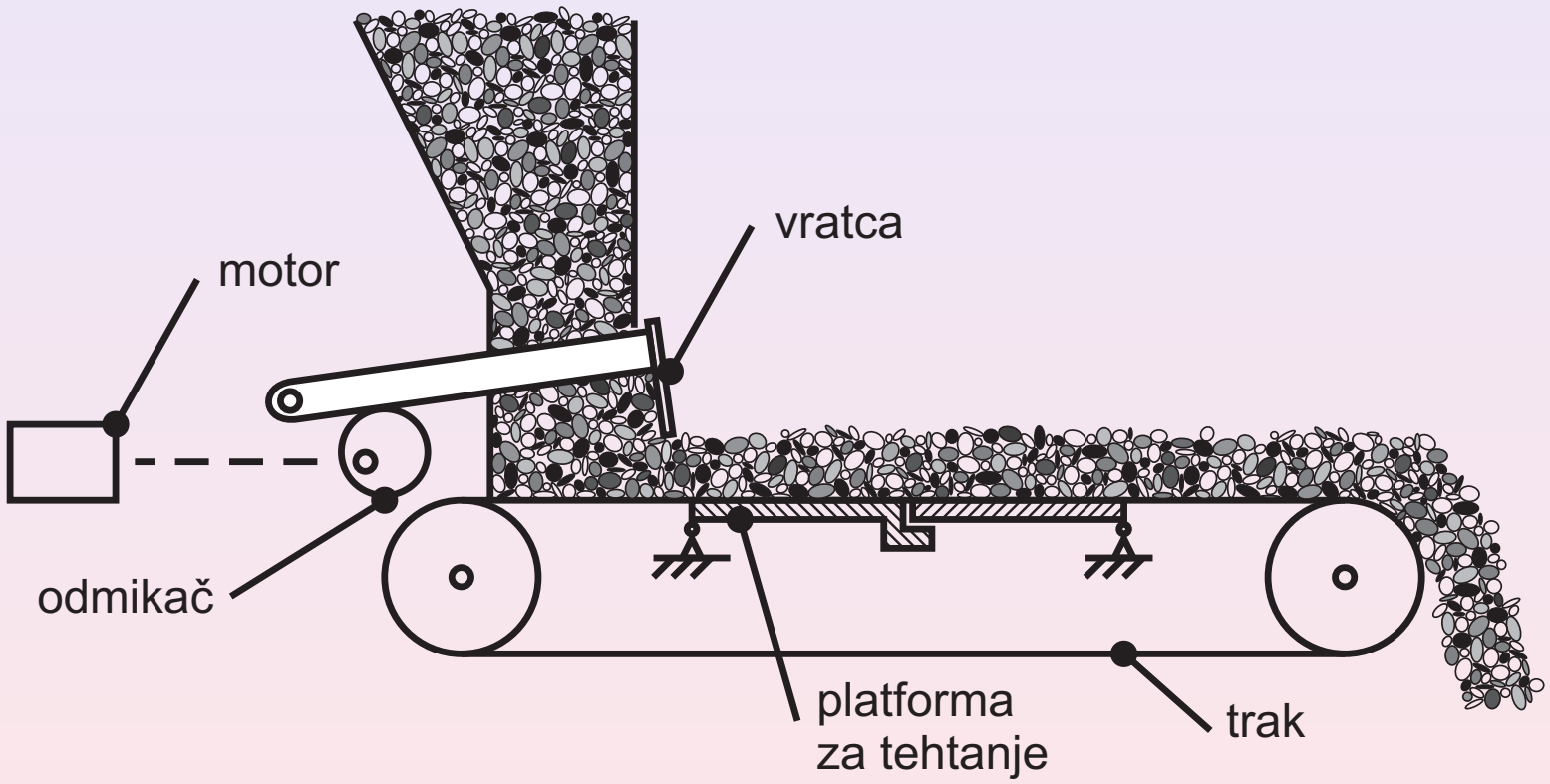

Odziv sistema s časovnim zadržkom

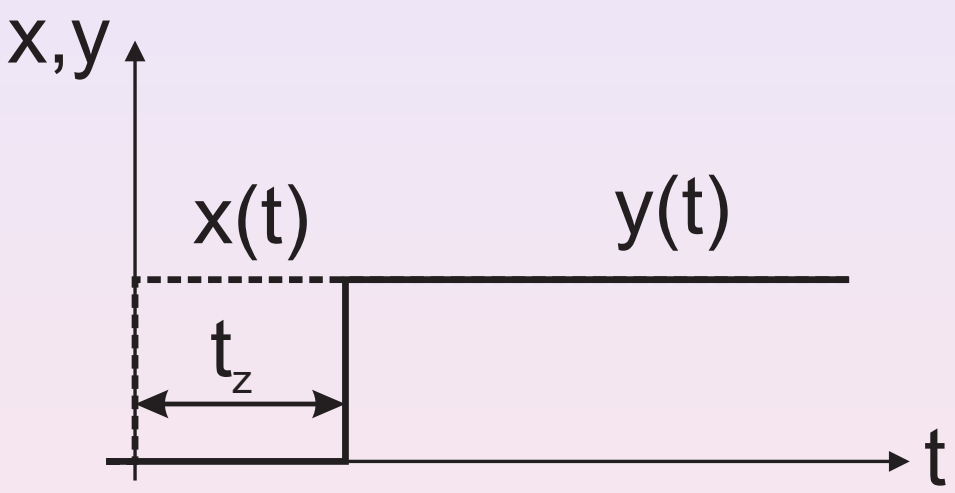

Opisuje ga izraz: $y(t) = x(t - t_z)$

Prenosne karakteristike sestavljenih sistemov

Z namenom analize kompleksnejših sistemov si najprej poglejmo osnovne gradnike in sicer

- Osnovne mehanske gradnike
- Osnovne električne gradnike

Osnovni mehanski gradniki

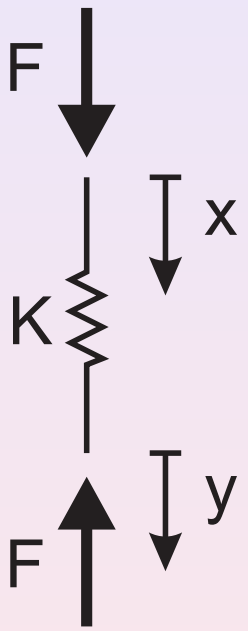

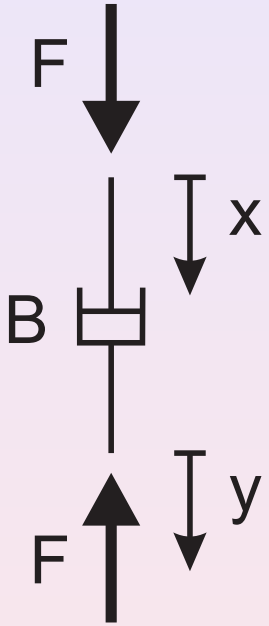

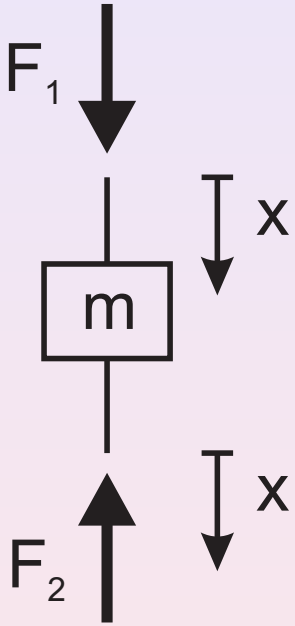

$$F = K(x - y)$$

$$F = BD(x - y)$$

$$F_1 - F_2 = mD^2x$$

Osnovni električni gradniki

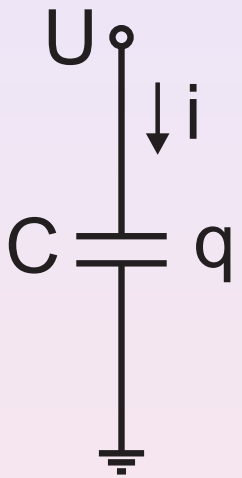

$$U = \frac{1}{CD} i$$

$$U = R\, i$$

$$U = L \frac{di}{dt}$$

Zaporedna vezava

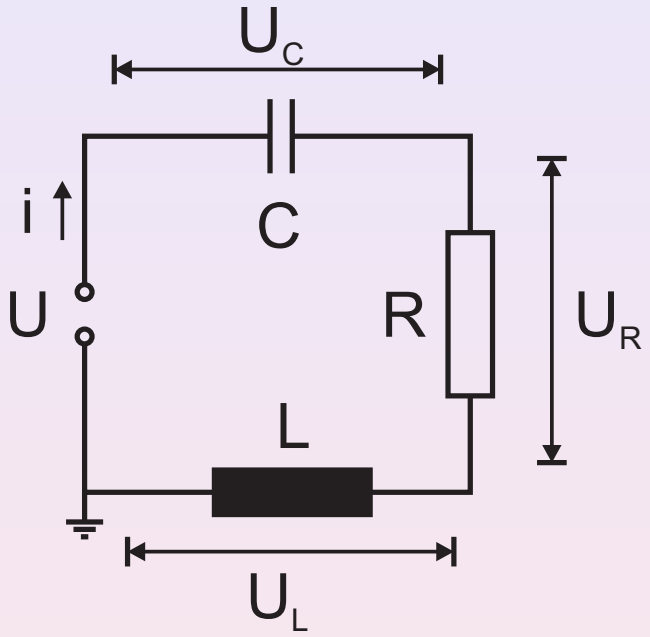

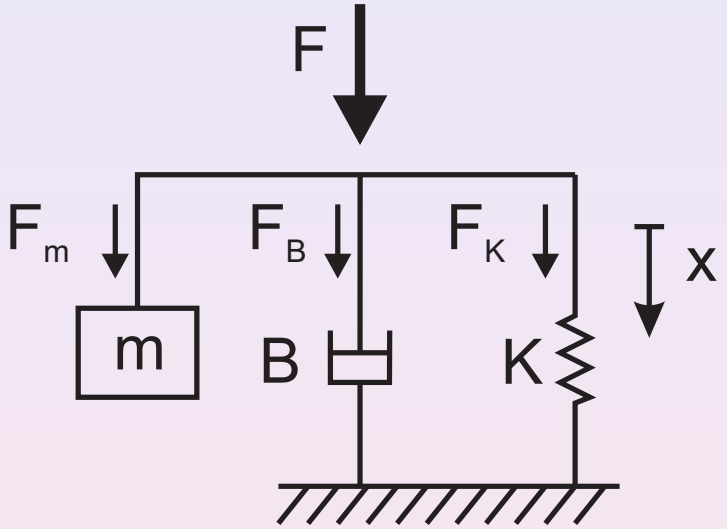

$$U = U_C + U_R + U_L = \frac{1}{CD} i + Ri + LDi = \left(\frac{1}{CD} + R + LD \right) i$$

$$F = F_m + F_B + F_K = mD^2 x + BDx + Kx = \left(mD^2 + BD + K \right) x$$

Vzporedna vezava

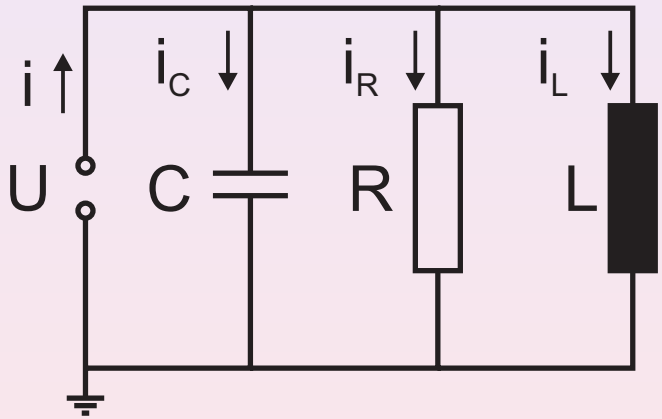

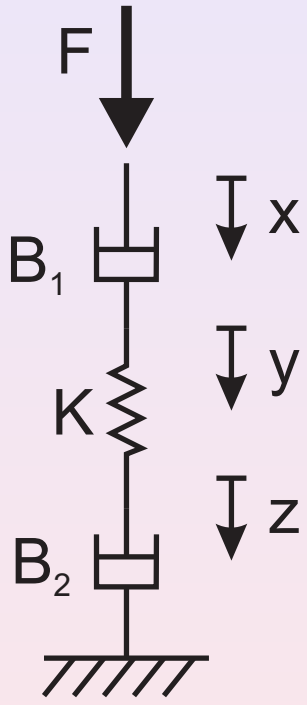

$$i = i_C + i_R + i_L = CDU + \frac{1}{R}U + \frac{1}{LD}U = \left(CD + \frac{1}{R} + \frac{1}{LD}\right)U$$

Vzporedna vezava (mehanski sistem)

$$F = B_1 D(x - y) \quad \Rightarrow \quad x - y = \frac{1}{B_1 D} F$$
$$F = K(y - z) \quad \Rightarrow \quad y - z = \frac{1}{K} F$$
$$F = B_2 D(z - 0) \quad \Rightarrow \quad z = \frac{1}{B_2 D} F$$

$$x = (x - y) + (y - z) + z = \left(\frac{1}{B_1 D} + \frac{1}{K} + \frac{1}{B_2 D} \right) F$$

Vzporedna vezava (težave z maso)

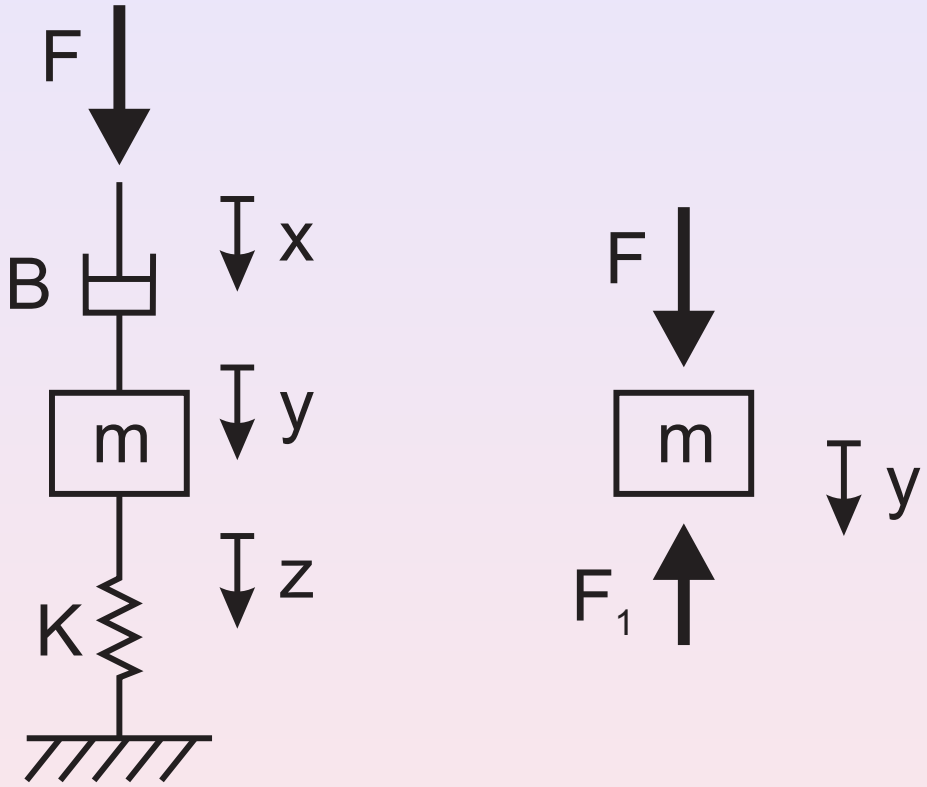

Vzporedna vezava (težave z maso)

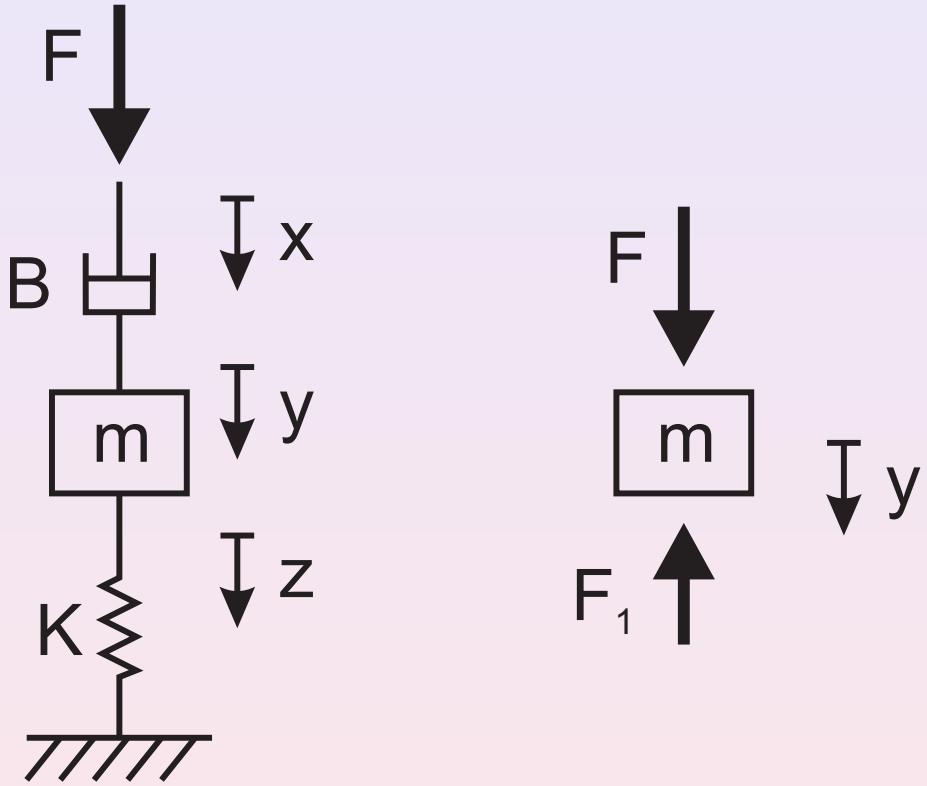

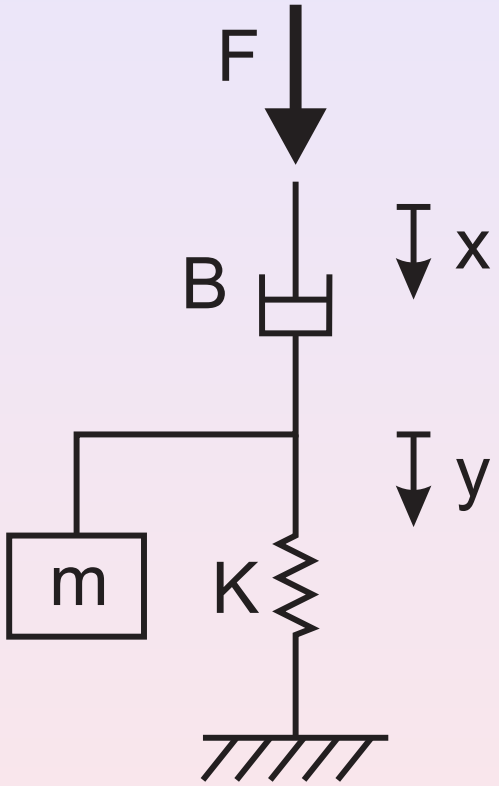

$$F_2 = F - F_1 = mD^2 y, \quad F_1 = Ky$$

$$F = F_1 + F_2 = \left(mD^2 + K\right) y$$

Primer 1

Za sistem na sliki določi mehansko impedanco in razmerje $F - x$!

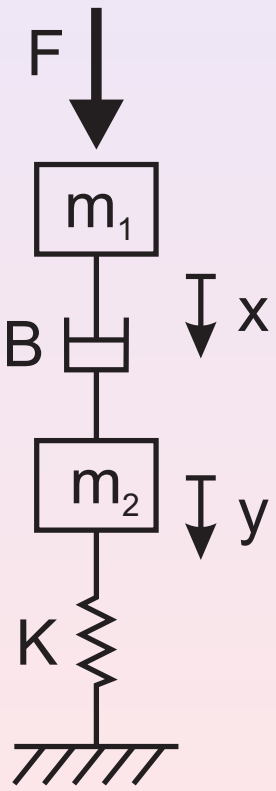

Primer 1

Za sistem na sliki določi mehansko impedanco in razmerje $F - x$!

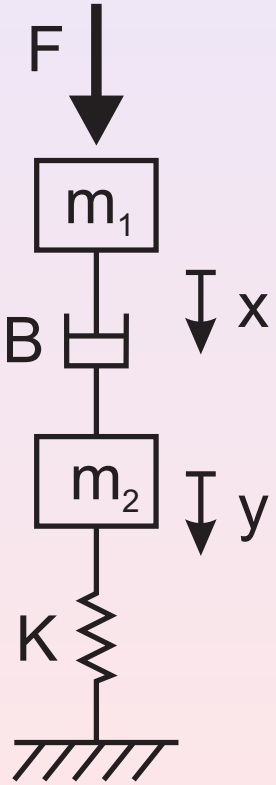

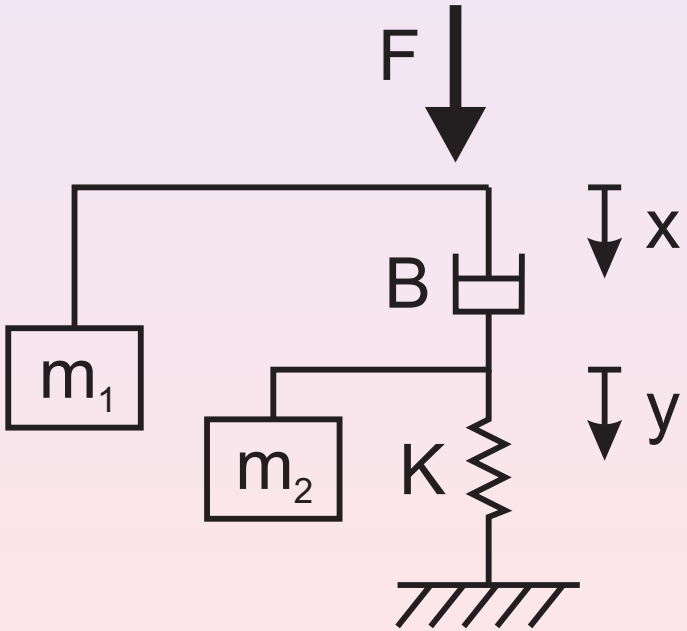

Tabela analogij

Veličina	Električna	Mehanska	Rotacijska	Pnevmatska	Toplotna
Količina	Naboj $Q[As]$	Pomik $x[m]$	Kot $\varphi[rad]$	Volumen $V[m^3]$	Toplota $Q[J]$
Potencial	Napetost $U[V]$	Sila $F[N]$	Moment $T[Nm]$	Tlak $p[Pa]$	Temp. $T[K]$
Tok	Elektr. tok $i[A]$	Hitrost $v[\frac{m}{s}]$	Kotna hitrost $\omega[\frac{rad}{s}]$	Pretok $Q[\frac{m^3}{s}]$	Topl. tok $P[W]$
Kapacitivnost	Kapac. $C[F]$	Obratna togost $\frac{1}{K}[\frac{m}{N}]$	Obratna rot. togost $\frac{1}{K_\varphi}[\frac{rad}{N}]$	Pnevmat. kapac. $C_p[\frac{m^3}{Pa}]$	Toplotna kapac. $C_\theta[\frac{J}{K}]$
Upornost	Upor. $R[\Omega]$	Koef. dušenja $B[\frac{Ns}{m}]$	Rot. koef. dušenja $B_\varphi[\frac{Ns}{rad}]$	Pnevmat. upor. $R_p[\frac{Pa\,s}{m^3}]$	Toplotna upor. $R_\theta[\frac{K}{W}]$
Vztrajnost	Indukt. $L[H]$	Masa $m[kg]$	Vztr. moment $J[kg\ m^2]$	Pnevm. indukt. $L_p[\frac{kg}{m^4}]$	

Tabela analogij (direktna in inverzna)

$$F = \left(mD^2 + BD + K\right) x \quad \Rightarrow \quad F = \left(mD + B + K\frac{1}{D}\right) Dx$$

$$U = \left(\frac{1}{CD} + R + LD\right) i = \left(LD^2 + RD + \frac{1}{C}\right) q$$

$$i = \left(CD + \frac{1}{R} + \frac{1}{LD}\right) U$$

Mehanska	Električna (direktna)	Električna (inverzna)
Pomik $x[m]$	Naboj $Q[As]$	Integ. napet. $\int U(t)dt$
Sila $F[N]$	Napetost $U[V]$	El. tok $i[A]$
Hitrost $v[\frac{m}{s}]$	Elektr. tok $i[A]$	El. napetost $U[V]$
Togost $K[\frac{N}{m}]$	Obratna kapac. $\frac{1}{C}[\frac{1}{F}]$	Obratna indukt. $\frac{1}{L}[\frac{1}{H}]$
Koef. dušenja $B[\frac{Ns}{m}]$	Upor. $R[\Omega]$	Obratna upor. $\frac{1}{R}[\frac{1}{\Omega}]$
Masa $m[kg]$	Induktivnost $L[H]$	Kapacitivnost $C[F]$

Primer 2

Za sistem na sliki določi mehansko impedanco! Nato nariši direktni in inverzni analog ter določi njuni impedanci. Dobljene izraze primerjaj in ovrednoti.

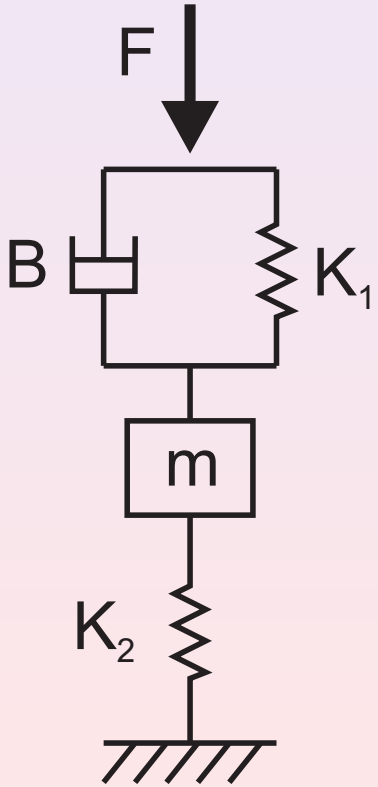

Primer 2

Za sistem na sliki določi mehansko impedanco! Nato nariši direktni in inverzni analog ter določi njuni impedanci. Dobljene izraze primerjaj in ovrednoti.

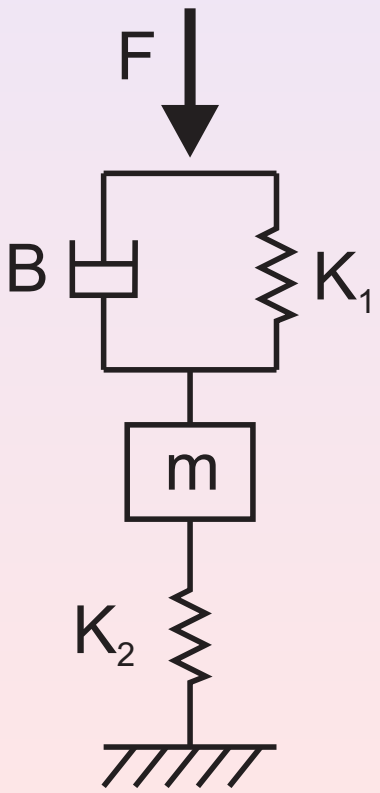

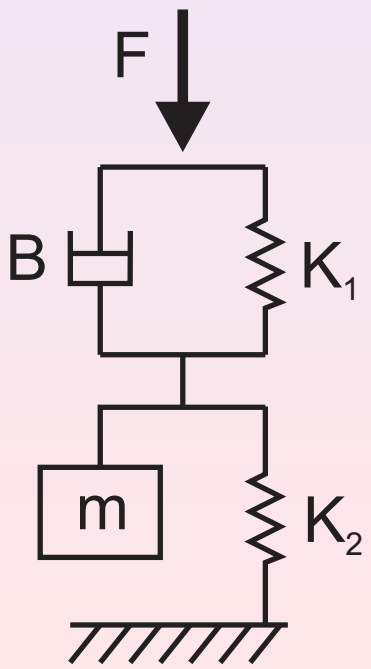

Primer 2 (Mehanski sistem)

Rešitve:

- $z_1 = mD^2 + K_2$
- $z_2 = BD + K_1$
- $z_{meh} = \frac{z_1 z_2}{z_1 + z_2} = \frac{(mD^2+K_2)(BD+K_1)}{mD^2+K_2+BD+K_1}$
- $F = \frac{(mD^2+K_2)(BD+K_1)}{mD^2+BD+K_1+K_2} x$
- $Dx = \frac{mD^3+BD^2+K_1 D+K_2 D}{(mD^2+K_2)(BD+K_1)} F$

Primer 2 (Mehanski sistem)

Rešitve:

- $z_1 = mD^2 + K_2$
- $z_2 = BD + K_1$
- $z_{meh} = \frac{z_1 z_2}{z_1 + z_2} = \frac{(mD^2+K_2)(BD+K_1)}{mD^2+K_2+BD+K_1}$
- $F = \frac{(mD^2+K_2)(BD+K_1)}{mD^2+BD+K_1+K_2} x$
- $Dx = \frac{mD^3+BD^2+K_1 D+K_2 D}{(mD^2+K_2)(BD+K_1)} F$

Primer 2 (Mehanski sistem)

Rešitve:

- $z_1 = mD^2 + K_2$
- $z_2 = BD + K_1$
- $z_{meh} = \frac{z_1\, z_2}{z_1+z_2} = \frac{(mD^2+K_2)(BD+K_1)}{mD^2+K_2+BD+K_1}$
- $F = \frac{(mD^2+K_2)(BD+K_1)}{mD^2+BD+K_1+K_2} x$
- $Dx = \frac{mD^3+BD^2+K_1D+K_2D}{(mD^2+K_2)(BD+K_1)} F$

Primer 2 (Mehanski sistem)

Rešitve:

- $z_1 = mD^2 + K_2$
- $z_2 = BD + K_1$
- $z_{meh} = \frac{z_1\, z_2}{z_1+z_2} = \frac{(mD^2+K_2)(BD+K_1)}{mD^2+K_2+BD+K_1}$
- $F = \frac{(mD^2+K_2)(BD+K_1)}{mD^2+BD+K_1+K_2} x$
- $Dx = \frac{mD^3+BD^2+K_1D+K_2D}{(mD^2+K_2)(BD+K_1)} F$

Primer 2 (Mehanski sistem)

Rešitve:

- $z_1 = mD^2 + K_2$
- $z_2 = BD + K_1$
- $z_{meh} = \frac{z_1\, z_2}{z_1+z_2} = \frac{(mD^2+K_2)(BD+K_1)}{mD^2+K_2+BD+K_1}$
- $F = \frac{(mD^2+K_2)(BD+K_1)}{mD^2+BD+K_1+K_2} x$
- $Dx = \frac{mD^3+BD^2+K_1D+K_2D}{(mD^2+K_2)(BD+K_1)} F$

Primer 2 (Direktna analogija 1)

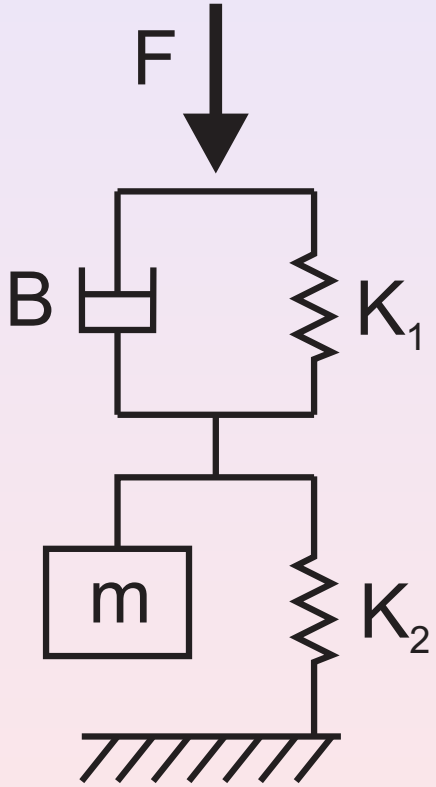

Primer 2 (Direktna analogija 1)

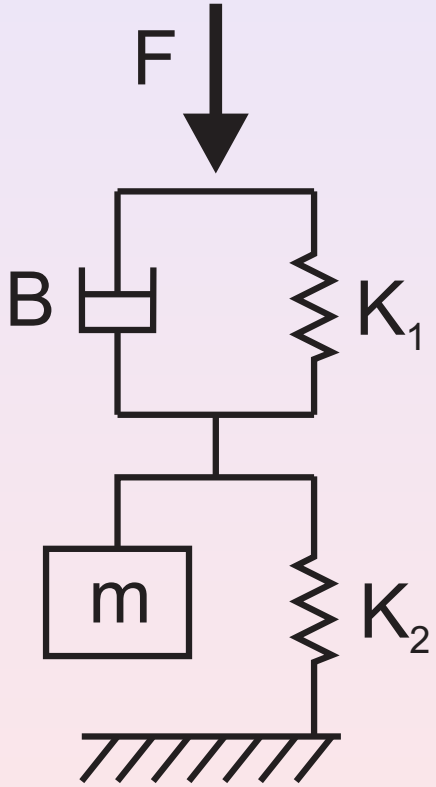

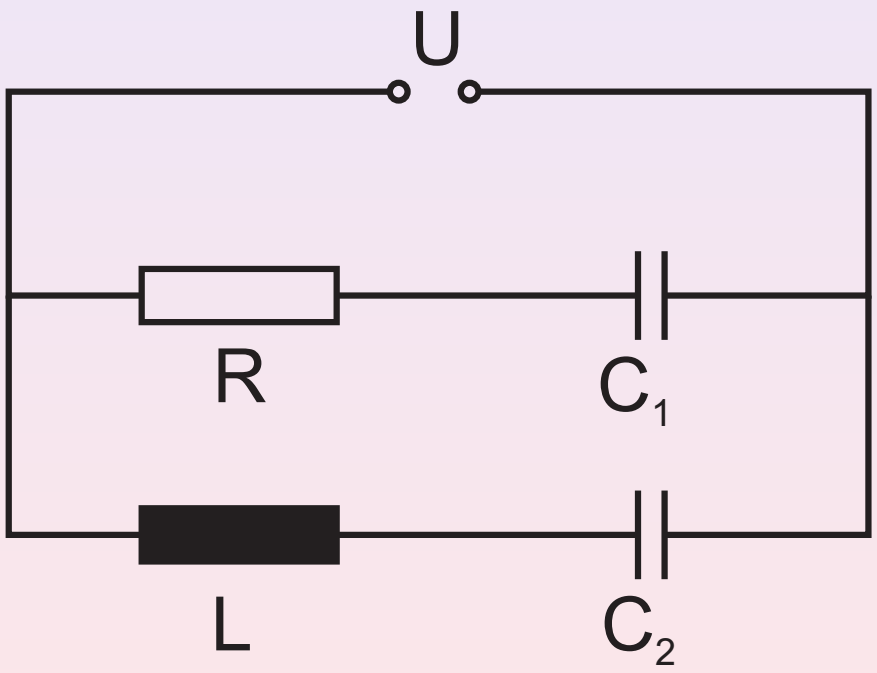

Primer 2 (Direktna analogija 2)

Rešitve:

- $z_3 = LD + \frac{1}{C_2 D}$
- $z_4 = R + \frac{1}{C_1 D}$
- $z_{el} = \frac{z_3\, z_4}{z_3 + z_4} = \frac{\left(LD + \frac{1}{C_2 D}\right)\left(R + \frac{1}{C_1 D}\right)}{LD + \frac{1}{C_2 D} + R + \frac{1}{C_1 D}}$
- $U = \frac{\left(LD + \frac{1}{C_2 D}\right)\left(R + \frac{1}{C_1 D}\right)}{LD + \frac{1}{C_2 D} + R + \frac{1}{C_1 D}} i = \frac{\left(LD + \frac{1}{C_2 D}\right)\left(RD + \frac{1}{C_1}\right)}{LD + \frac{1}{C_2 D} + R + \frac{1}{C_1 D}} q$
- $U = \frac{\left(LD^2 + \frac{1}{C_2}\right)\left(RD + \frac{1}{C_1}\right)}{LD^2 + RD + \frac{1}{C_1} + \frac{1}{C_2}} q$
- $F = \frac{(mD^2 + K_2)(BD + K_1)}{mD^2 + BD + K_1 + K_2} x$

Primer 2 (Direktna analogija 2)

Rešitve:

- $z_3 = LD + \frac{1}{C_2 D}$
- $z_4 = R + \frac{1}{C_1 D}$
- $z_{el} = \frac{z_3\, z_4}{z_3 + z_4} = \frac{\left(LD + \frac{1}{C_2 D}\right)\left(R + \frac{1}{C_1 D}\right)}{LD + \frac{1}{C_2 D} + R + \frac{1}{C_1 D}}$
- $U = \frac{\left(LD + \frac{1}{C_2 D}\right)\left(R + \frac{1}{C_1 D}\right)}{LD + \frac{1}{C_2 D} + R + \frac{1}{C_1 D}} i = \frac{\left(LD + \frac{1}{C_2 D}\right)\left(RD + \frac{1}{C_1}\right)}{LD + \frac{1}{C_2 D} + R + \frac{1}{C_1 D}} q$
- $U = \frac{\left(LD^2 + \frac{1}{C_2}\right)\left(RD + \frac{1}{C_1}\right)}{LD^2 + RD + \frac{1}{C_1} + \frac{1}{C_2}} q$
- $F = \frac{(mD^2 + K_2)(BD + K_1)}{mD^2 + BD + K_1 + K_2} x$

Primer 2 (Direktna analogija 2)

Rešitve:

- $z_3 = LD + \frac{1}{C_2 D}$
- $z_4 = R + \frac{1}{C_1 D}$
- $z_{el} = \frac{z_3\, z_4}{z_3 + z_4} = \frac{\left(LD + \frac{1}{C_2 D}\right)\left(R + \frac{1}{C_1 D}\right)}{LD + \frac{1}{C_2 D} + R + \frac{1}{C_1 D}}$
- $U = \frac{\left(LD + \frac{1}{C_2 D}\right)\left(R + \frac{1}{C_1 D}\right)}{LD + \frac{1}{C_2 D} + R + \frac{1}{C_1 D}} i = \frac{\left(LD + \frac{1}{C_2 D}\right)\left(RD + \frac{1}{C_1}\right)}{LD + \frac{1}{C_2 D} + R + \frac{1}{C_1 D}} q$
- $U = \frac{\left(LD^2 + \frac{1}{C_2}\right)\left(RD + \frac{1}{C_1}\right)}{LD^2 + RD + \frac{1}{C_1} + \frac{1}{C_2}} q$
- $F = \frac{(mD^2 + K_2)(BD + K_1)}{mD^2 + BD + K_1 + K_2} x$

Primer 2 (Direktna analogija 2)

Rešitve:

- $z_3 = LD + \frac{1}{C_2 D}$
- $z_4 = R + \frac{1}{C_1 D}$
- $z_{el} = \frac{z_3\, z_4}{z_3 + z_4} = \frac{\left(LD + \frac{1}{C_2 D}\right)\left(R + \frac{1}{C_1 D}\right)}{LD + \frac{1}{C_2 D} + R + \frac{1}{C_1 D}}$
- $U = \frac{\left(LD + \frac{1}{C_2 D}\right)\left(R + \frac{1}{C_1 D}\right)}{LD + \frac{1}{C_2 D} + R + \frac{1}{C_1 D}} i = \frac{\left(LD + \frac{1}{C_2 D}\right)\left(RD + \frac{1}{C_1}\right)}{LD + \frac{1}{C_2 D} + R + \frac{1}{C_1 D}} q$
- $U = \frac{\left(LD^2 + \frac{1}{C_2}\right)\left(RD + \frac{1}{C_1}\right)}{LD^2 + RD + \frac{1}{C_1} + \frac{1}{C_2}} q$
- $F = \frac{(mD^2 + K_2)(BD + K_1)}{mD^2 + BD + K_1 + K_2} x$

Primer 2 (Direktna analogija 2)

Rešitve:

- $z_3 = LD + \frac{1}{C_2 D}$
- $z_4 = R + \frac{1}{C_1 D}$
- $z_{el} = \frac{z_3\, z_4}{z_3 + z_4} = \frac{\left(LD + \frac{1}{C_2 D}\right)\left(R + \frac{1}{C_1 D}\right)}{LD + \frac{1}{C_2 D} + R + \frac{1}{C_1 D}}$
- $U = \frac{\left(LD + \frac{1}{C_2 D}\right)\left(R + \frac{1}{C_1 D}\right)}{LD + \frac{1}{C_2 D} + R + \frac{1}{C_1 D}} i = \frac{\left(LD + \frac{1}{C_2 D}\right)\left(RD + \frac{1}{C_1}\right)}{LD + \frac{1}{C_2 D} + R + \frac{1}{C_1 D}} q$
- $U = \frac{\left(LD^2 + \frac{1}{C_2}\right)\left(RD + \frac{1}{C_1}\right)}{LD^2 + RD + \frac{1}{C_1} + \frac{1}{C_2}} q$
- $F = \frac{(mD^2 + K_2)(BD + K_1)}{mD^2 + BD + K_1 + K_2} x$

Primer 2 (Direktna analogija 2)

Rešitve:

- $z_3 = LD + \frac{1}{C_2 D}$
- $z_4 = R + \frac{1}{C_1 D}$
- $z_{el} = \frac{z_3\, z_4}{z_3 + z_4} = \frac{\left(LD + \frac{1}{C_2 D}\right)\left(R + \frac{1}{C_1 D}\right)}{LD + \frac{1}{C_2 D} + R + \frac{1}{C_1 D}}$
- $U = \frac{\left(LD + \frac{1}{C_2 D}\right)\left(R + \frac{1}{C_1 D}\right)}{LD + \frac{1}{C_2 D} + R + \frac{1}{C_1 D}} i = \frac{\left(LD + \frac{1}{C_2 D}\right)\left(RD + \frac{1}{C_1}\right)}{LD + \frac{1}{C_2 D} + R + \frac{1}{C_1 D}} q$
- $U = \frac{\left(LD^2 + \frac{1}{C_2}\right)\left(RD + \frac{1}{C_1}\right)}{LD^2 + RD + \frac{1}{C_1} + \frac{1}{C_2}} q$
- $F = \frac{(mD^2 + K_2)(BD + K_1)}{mD^2 + BD + K_1 + K_2} x$

Primer 2 (Inverzna analogija 1)

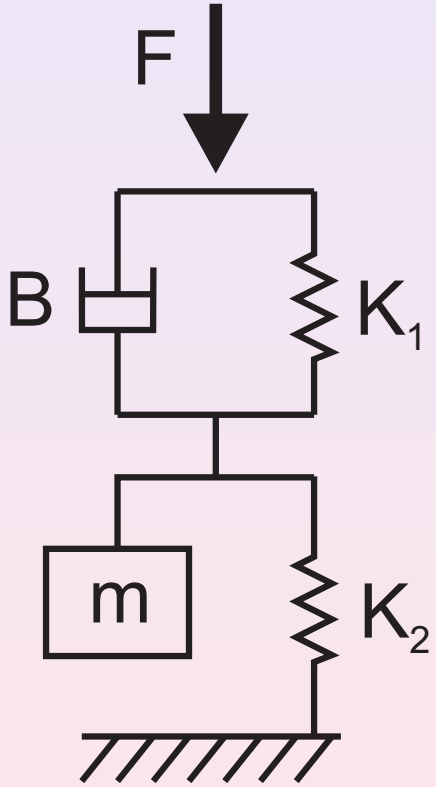

Primer 2 (Inverzna analogija 1)

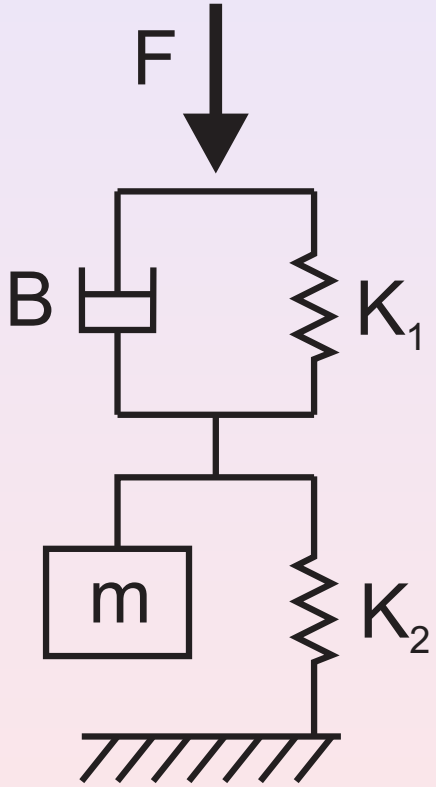

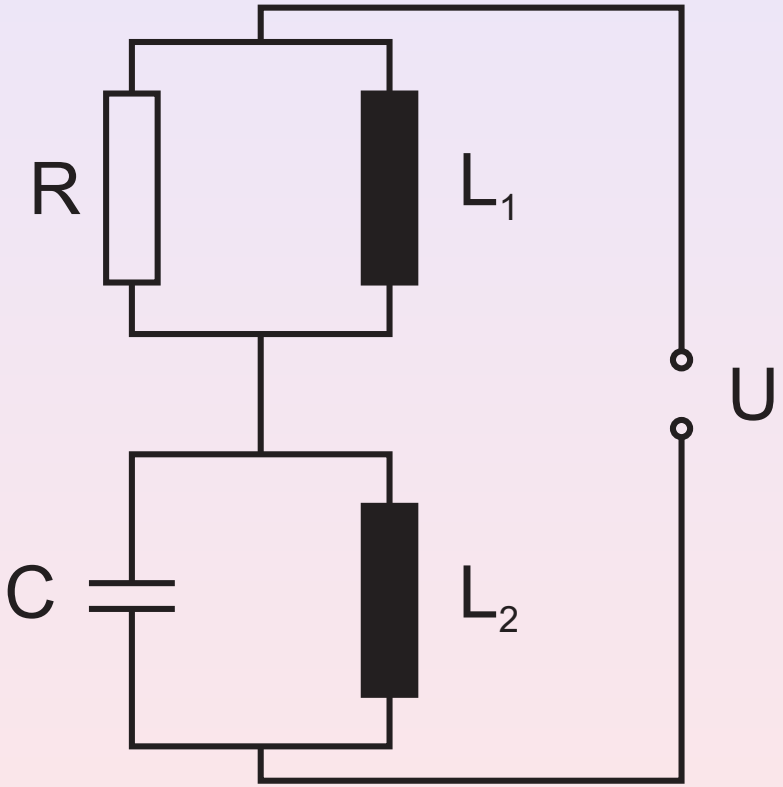

Primer 2 (Inverzna analogija 2)

Rešitve:

- $z_5 = \frac{1}{\frac{1}{\frac{1}{CD}} + \frac{1}{L_2 D}} = \frac{1}{CD + \frac{1}{L_2 D}} = \frac{L_2 D}{CL_2 D^2 + 1}$
- $z_6 = \frac{R \cdot L_1 D}{R + L_1 D} = \frac{L_1 R D}{L_1 D + R}$
- $z_{el} = \frac{R L_1 L_2 \left(CD^3 + \frac{1}{R} D^2 + \frac{1}{L_1} D + \frac{1}{L_2} D \right)}{L_2 \left(CD^2 + \frac{1}{L_2} \right) \cdot R L_1 \left(\frac{1}{R} D + \frac{1}{L_1} \right)}$
- $U = \frac{CD^3 + \frac{1}{R} D^2 + \frac{1}{L_1} D + \frac{1}{L_2} D}{\left(CD^2 + \frac{1}{L_2} \right) \left(\frac{1}{R} D + \frac{1}{L_1} \right)} i$
- $Dx = \frac{mD^3 + BD^2 + K_1 D + K_2 D}{(mD^2 + K_2)(BD + K_1)} F$

Primer 2 (Inverzna analogija 2)

Rešitve:

- $z_5 = \frac{1}{\frac{1}{\frac{1}{CD}}+\frac{1}{L_2 D}} = \frac{1}{CD+\frac{1}{L_2 D}} = \frac{L_2 D}{CL_2 D^2+1}$
- $z_6 = \frac{R \cdot L_1 D}{R+L_1 D} = \frac{L_1 R D}{L_1 D+R}$
- $z_{el} = \frac{RL_1 L_2\left(CD^3+\frac{1}{R}D^2+\frac{1}{L_1}D+\frac{1}{L_2}D\right)}{L_2\left(CD^2+\frac{1}{L_2}\right)\cdot RL_1\left(\frac{1}{R}D+\frac{1}{L_1}\right)}$
- $U = \frac{CD^3+\frac{1}{R}D^2+\frac{1}{L_1}D+\frac{1}{L_2}D}{\left(CD^2+\frac{1}{L_2}\right)\left(\frac{1}{R}D+\frac{1}{L_1}\right)}\, i$
- $Dx = \frac{mD^3+BD^2+K_1 D+K_2 D}{(mD^2+K_2)(BD+K_1)} F$

Primer 2 (Inverzna analogija 2)

Rešitve:

- $z_5 = \frac{1}{\frac{1}{\frac{1}{CD}}+\frac{1}{L_2 D}} = \frac{1}{CD+\frac{1}{L_2 D}} = \frac{L_2 D}{CL_2 D^2+1}$
- $z_6 = \frac{R \cdot L_1 D}{R+L_1 D} = \frac{L_1 R D}{L_1 D+R}$
- $z_{el} = \frac{RL_1 L_2\left(CD^3+\frac{1}{R}D^2+\frac{1}{L_1}D+\frac{1}{L_2}D\right)}{L_2\left(CD^2+\frac{1}{L_2}\right)\cdot RL_1\left(\frac{1}{R}D+\frac{1}{L_1}\right)}$
- $U = \frac{CD^3+\frac{1}{R}D^2+\frac{1}{L_1}D+\frac{1}{L_2}D}{\left(CD^2+\frac{1}{L_2}\right)\left(\frac{1}{R}D+\frac{1}{L_1}\right)}\, i$
- $Dx = \frac{mD^3+BD^2+K_1 D+K_2 D}{(mD^2+K_2)(BD+K_1)} F$

Primer 2 (Inverzna analogija 2)

Rešitve:

- $z_5 = \frac{1}{\frac{1}{\frac{1}{CD}}+\frac{1}{L_2 D}} = \frac{1}{CD+\frac{1}{L_2 D}} = \frac{L_2 D}{CL_2 D^2+1}$
- $z_6 = \frac{R \cdot L_1 D}{R+L_1 D} = \frac{L_1 R D}{L_1 D+R}$
- $z_{el} = \frac{RL_1 L_2\left(CD^3+\frac{1}{R}D^2+\frac{1}{L_1}D+\frac{1}{L_2}D\right)}{L_2\left(CD^2+\frac{1}{L_2}\right)\cdot RL_1\left(\frac{1}{R}D+\frac{1}{L_1}\right)}$
- $U = \frac{CD^3+\frac{1}{R}D^2+\frac{1}{L_1}D+\frac{1}{L_2}D}{\left(CD^2+\frac{1}{L_2}\right)\left(\frac{1}{R}D+\frac{1}{L_1}\right)}\ i$
- $Dx = \frac{mD^3+BD^2+K_1 D+K_2 D}{(mD^2+K_2)(BD+K_1)} F$

Primer 2 (Inverzna analogija 2)

Rešitve:

- $z_5 = \frac{1}{\frac{1}{\frac{1}{CD}}+\frac{1}{L_2 D}} = \frac{1}{CD+\frac{1}{L_2 D}} = \frac{L_2 D}{CL_2 D^2+1}$
- $z_6 = \frac{R \cdot L_1 D}{R+L_1 D} = \frac{L_1 R D}{L_1 D+R}$
- $z_{el} = \frac{RL_1 L_2\left(CD^3+\frac{1}{R}D^2+\frac{1}{L_1}D+\frac{1}{L_2}D\right)}{L_2\left(CD^2+\frac{1}{L_2}\right)\cdot RL_1\left(\frac{1}{R}D+\frac{1}{L_1}\right)}$
- $U = \frac{CD^3+\frac{1}{R}D^2+\frac{1}{L_1}D+\frac{1}{L_2}D}{\left(CD^2+\frac{1}{L_2}\right)\left(\frac{1}{R}D+\frac{1}{L_1}\right)}\ i$
- $Dx = \frac{mD^3+BD^2+K_1 D+K_2 D}{(mD^2+K_2)(BD+K_1)} F$